CYW9BTMDM2BASE1
INFINEON M.2 BT/BLE MODULE BASEBOARD

CONTENTS

PAGE	DESCRIPTION
01	Title Page
02	System Block Diagram
03	PMU Block Diagram
04	M.2 Interface
05	Peripherals
06	KitProg3
07	Power
08	Revision History

Drawing Numbers

PCBA	121-90805-01
PCB	600-90805-01
FAB DRW	610-90805-01
ASSY DRW	620-90805-01
SCH DRW	630-90805-01

Legal Disclaimer :
The information given in this document shall in no event be regarded as a guarantee of conditions or characteristics. With respect to any examples or hints given herein, any typical values stated herein and/or any information regarding the application of the device, Infineon Technologies hereby disclaims any and all warranties and liabilities of any kind, including without limitation, warranties of non-infringement of intellectual property rights of any third party.

SCH Title : CYW9BTMDM2BASE1

Page Title: Title Page

Size	Document Number	Drawn By	Approved By	Rev
A4	630-90805-01	Eric Yang	Seon Lee	1.1

Date: Friday, August 11, 2023 Sheet 1 of 8

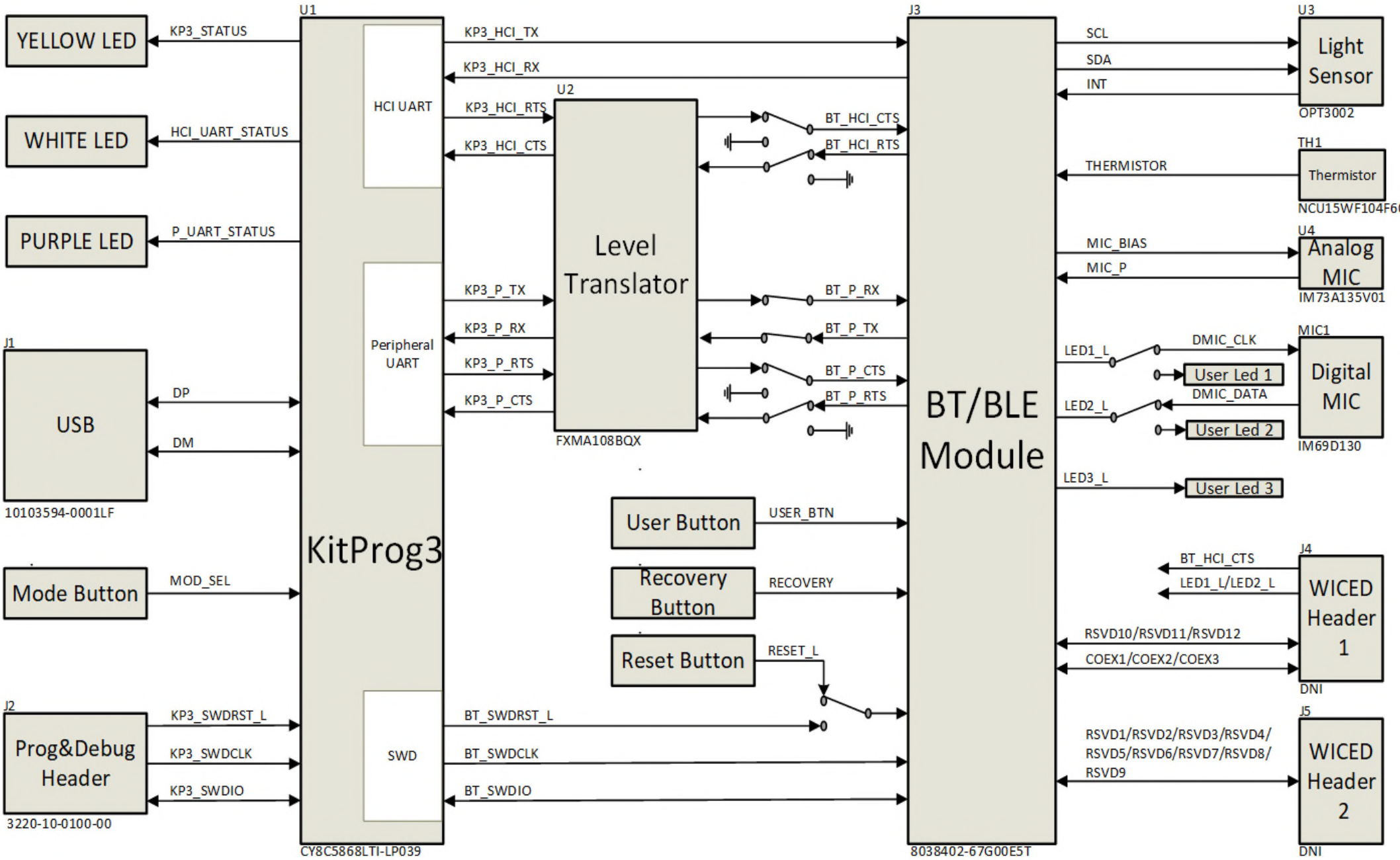

Legal Disclaimer :
The information given in this document shall in no event be regarded as a guarantee of conditions or characteristics. With respect to any examples or hints given herein, any typical values stated herein and/or any information regarding the application of the device, Infineon Technologies hereby disclaims any and all warranties and liabilities of any kind, including without limitation, warranties of non-infringement of intellectual property rights of any third party.

SCH Title : CYW9BTMDM2BASE1

Page Title: System Block Diagram

Size	Document Number	Drawn By	Approved By	Rev
A4	630-90805-01	Eric Yang	Seon Lee	1.1

Date: Friday, August 11, 2023 Sheet 2 of 8

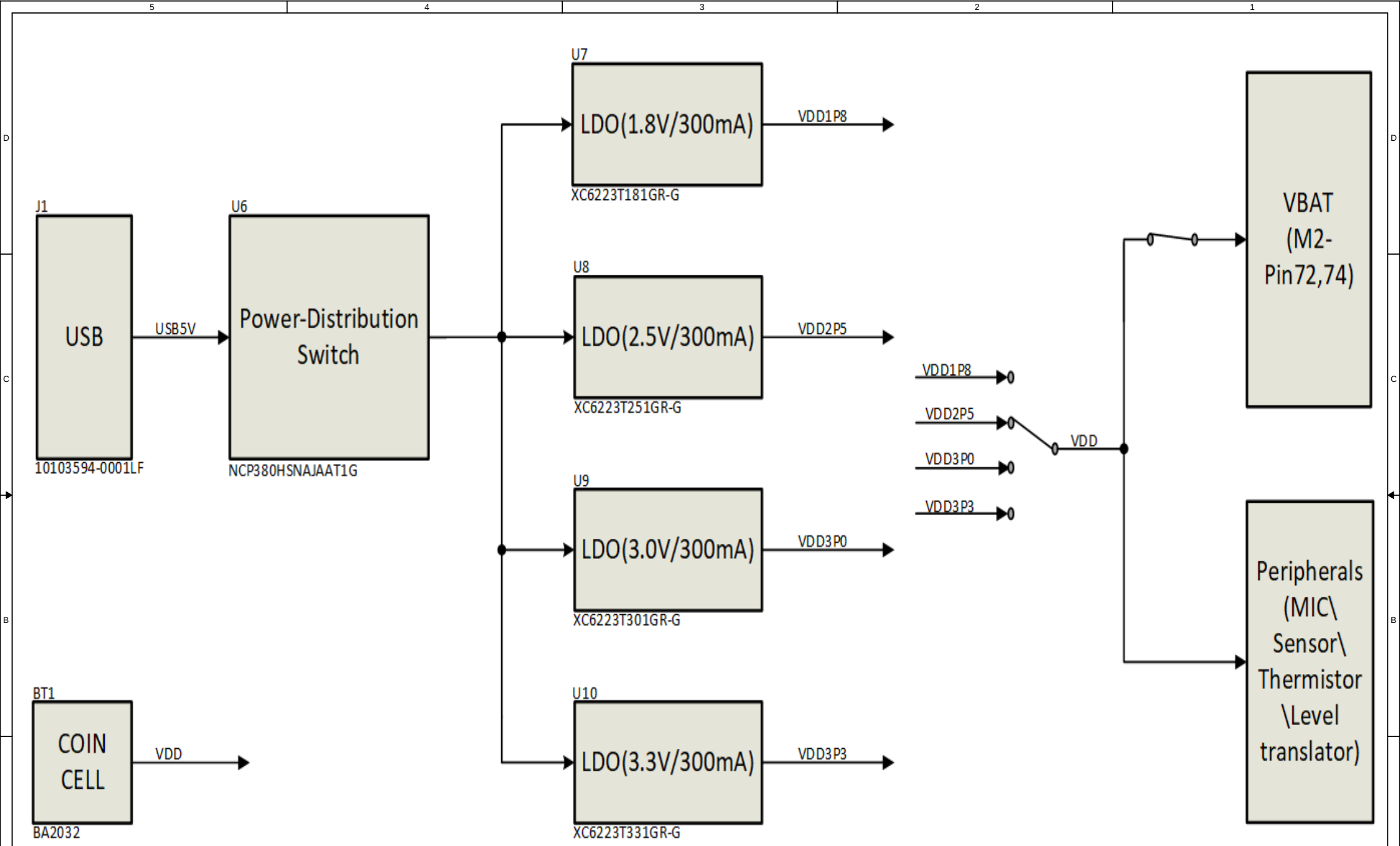

Legal Disclaimer :
The information given in this document shall in no event be regarded as a guarantee of conditions or characteristics. With respect to any examples or hints given herein, any typical values stated herein and/or any information regarding the application of the device, Infineon Technologies hereby disclaims any and all warranties and liabilities of any kind, including without limitation, warranties of non-infringement of intellectual property rights of any third party.

SCH Title : CYW9BTMDM2BASE1				
Page Title: PMU Block Diagram				
Size	Document Number	Drawn By	Approved By	Rev
A4	630-90805-01	Eric Yang	Seon Lee	1.1
Date: Friday, August 11, 2023		Sheet 3 of 8		

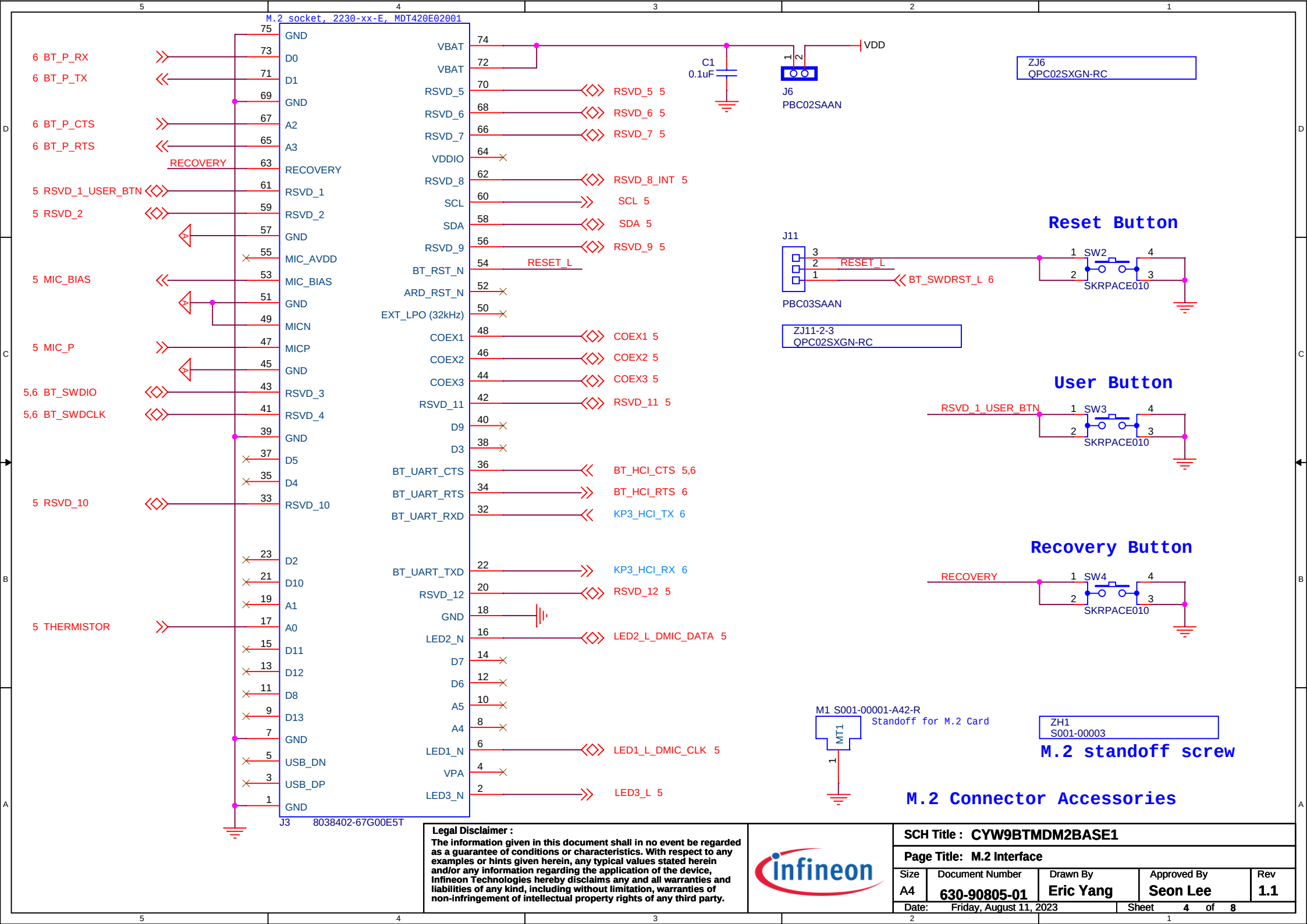

Legal Disclaimer :
The information given in this document shall in no event be regarded as a guarantee of conditions or characteristics. With respect to any examples or hints given herein, any typical values stated herein and/or any information regarding the application of the device, Infineon Technologies hereby disclaims any and all warranties and liabilities of any kind, including without limitation, warranties of non-infringement of intellectual property rights of any third party.

SCH Title : CYW9BTMDM2BASE1				
Page Title: M.2 Interface				
Size	Document Number	Drawn By	Approved By	Rev
A4	630-90805-01	Eric Yang	Seon Lee	1.1
Date: Friday, August 11, 2023		Sheet 4 of 8		

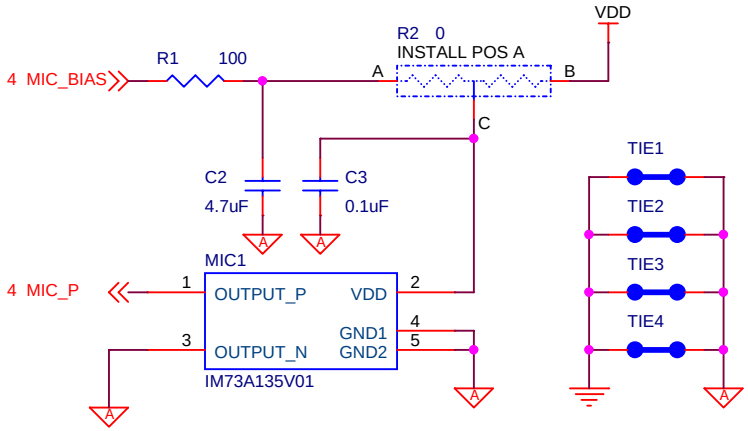

Analog Mic

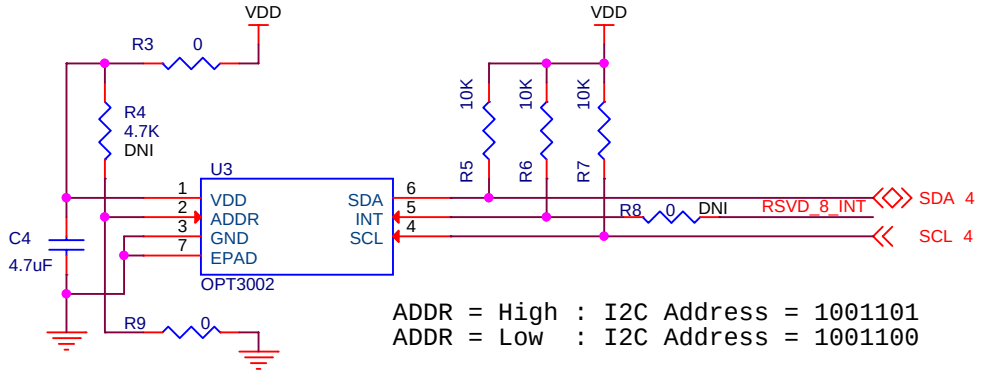

Ambient Light Sensor

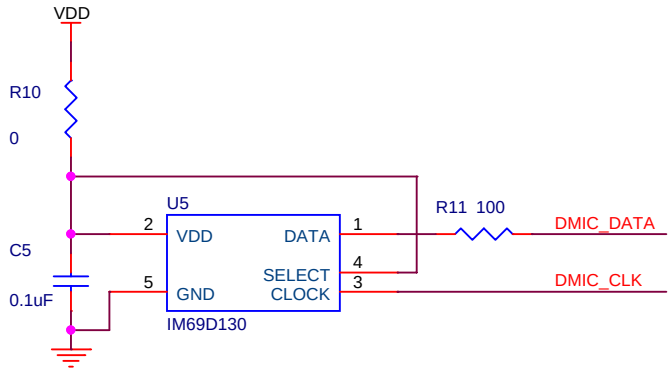

Digital Mic

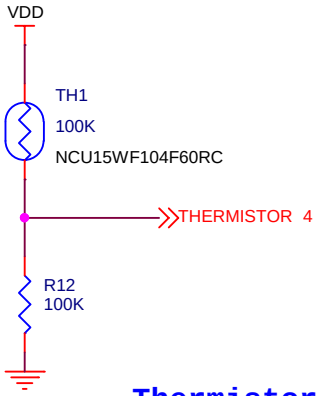

Thermistor

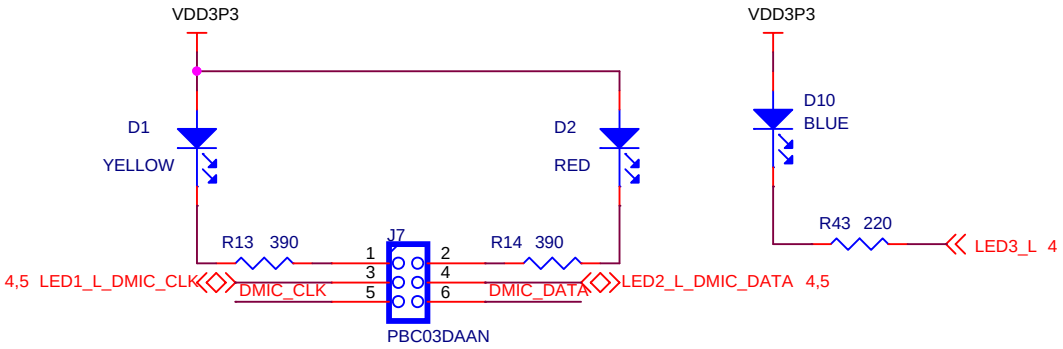

User LEDs

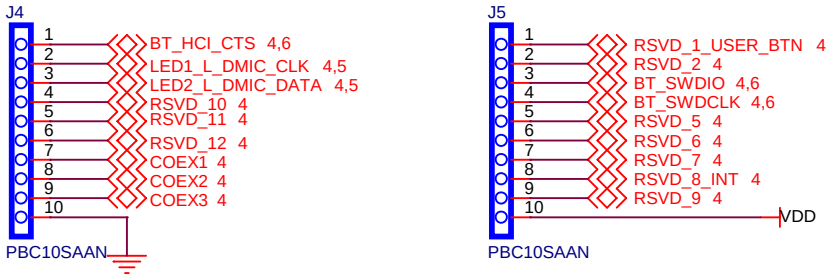

WICED HEADERS

ZJ7-1-3
QPC02SXGN-RC

ZJ7-2-4
QPC02SXGN-RC

Legal Disclaimer :
The information given in this document shall in no event be regarded as a guarantee of conditions or characteristics. With respect to any examples or hints given herein, any typical values stated herein and/or any information regarding the application of the device, Infineon Technologies hereby disclaims any and all warranties and liabilities of any kind, including without limitation, warranties of non-infringement of intellectual property rights of any third party.

SCH Title : CYW9BTMDM2BASE1				
Page Title: Peripherals				
Size	Document Number	Drawn By	Approved By	Rev
A4	630-90805-01	Eric Yang	Seon Lee	1.1
Date: Friday, August 11, 2023		Sheet 5 of 8		

Digital Interface
User Interface
Power Management
Special Function

PSoC 5LP based KitProg3

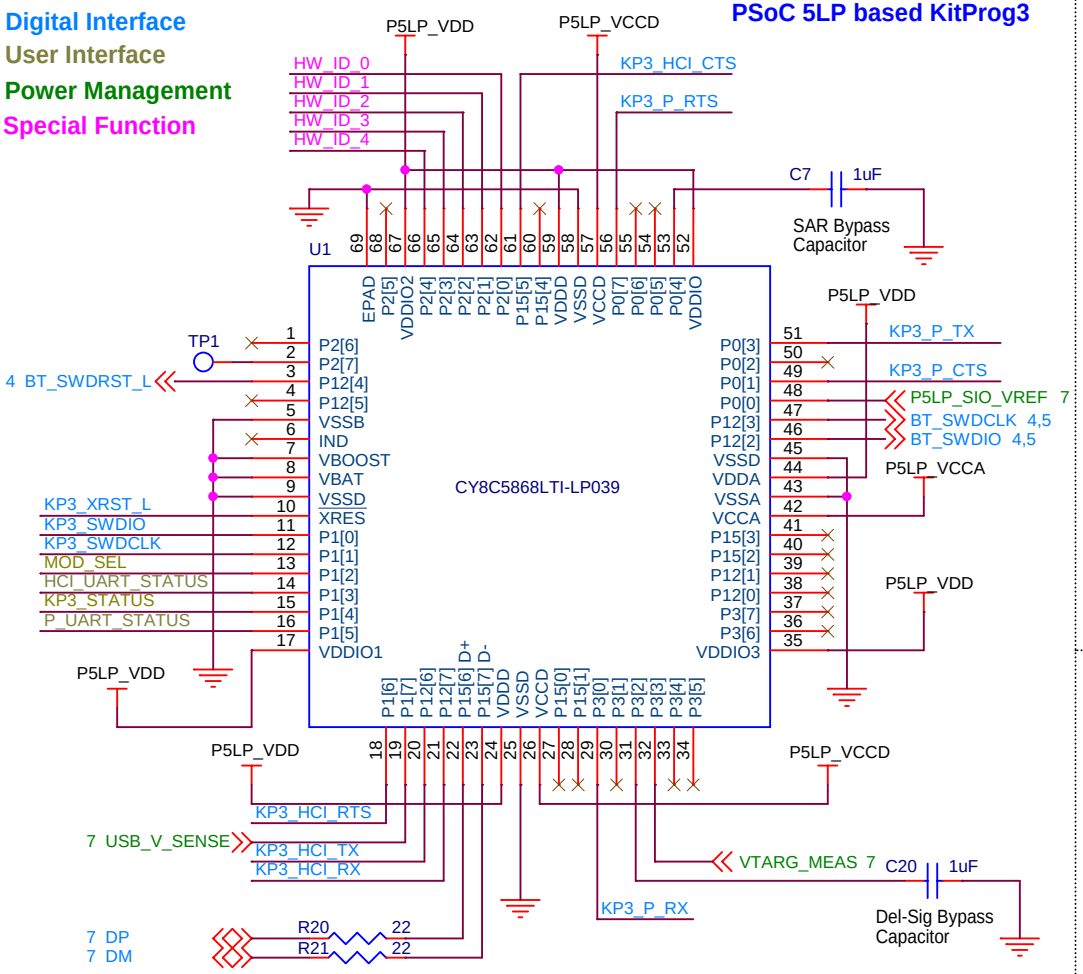

Level Translator

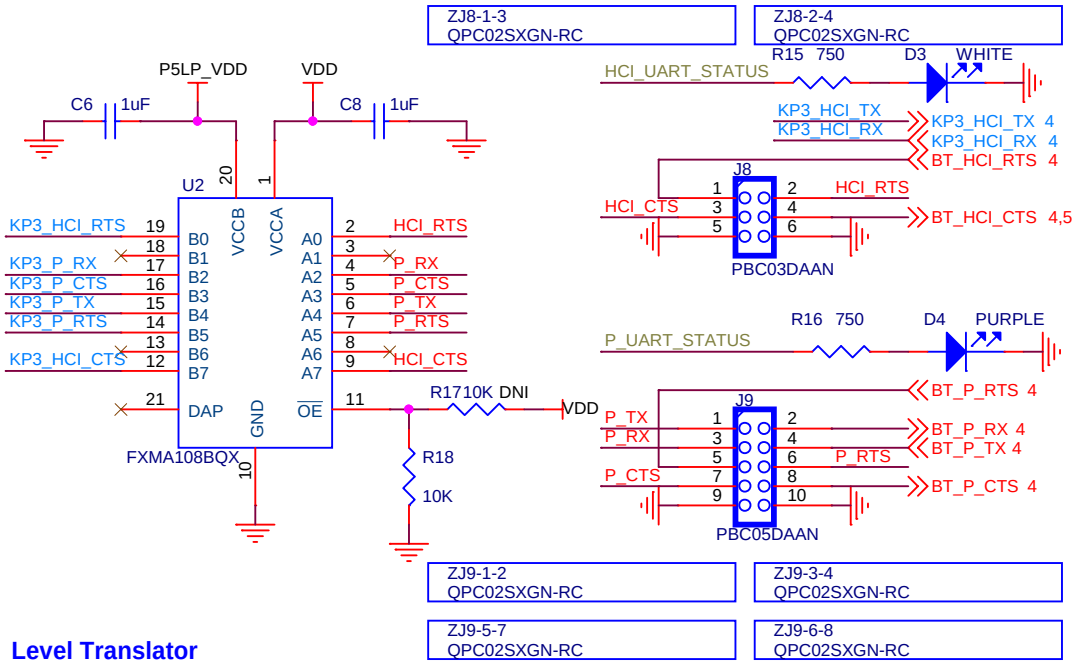

Decoupling Capacitors

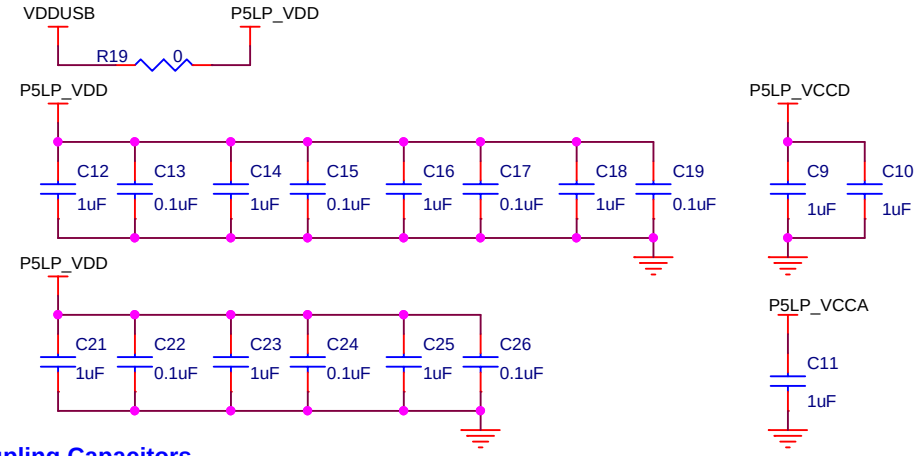

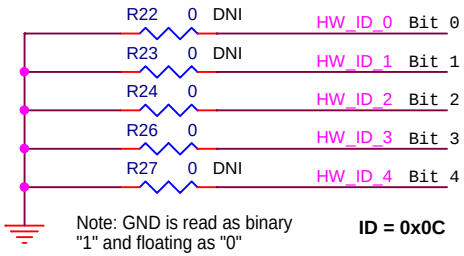

KitProg3 Hardware Revision

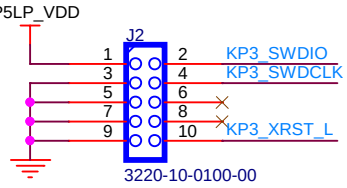

Prog&Debug Header

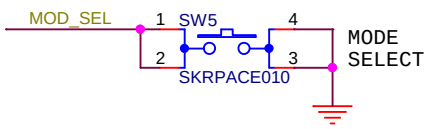

PSoC 5LP Mode Select Switch

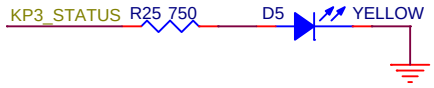

KitProg3 Status LED

Legal Disclaimer :
The information given in this document shall in no event be regarded as a guarantee of conditions or characteristics. With respect to any examples or hints given herein, any typical values stated herein and/or any information regarding the application of the device, Infineon Technologies hereby disclaims any and all warranties and liabilities of any kind, including without limitation, warranties of non-infringement of intellectual property rights of any third party.

SCH Title : CYW9BTMDM2BASE1				
Page Title: KitProg3				
Size	Document Number	Drawn By	Approved By	Rev
A4	630-90805-01	Eric Yang	Seon Lee	1.1
Date: Friday, August 11, 2023		Sheet 6 of 8		

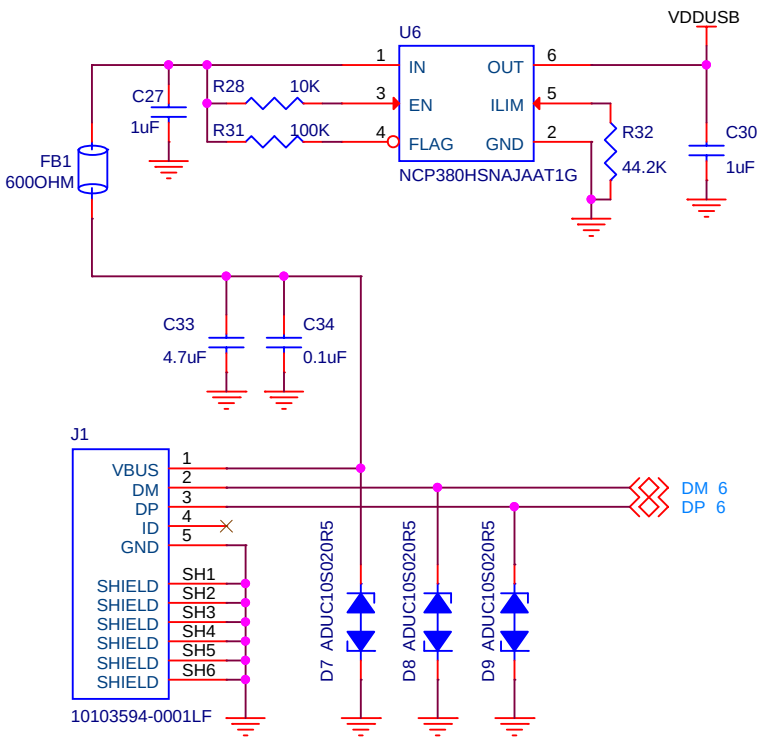

KitProg3 USB Connector

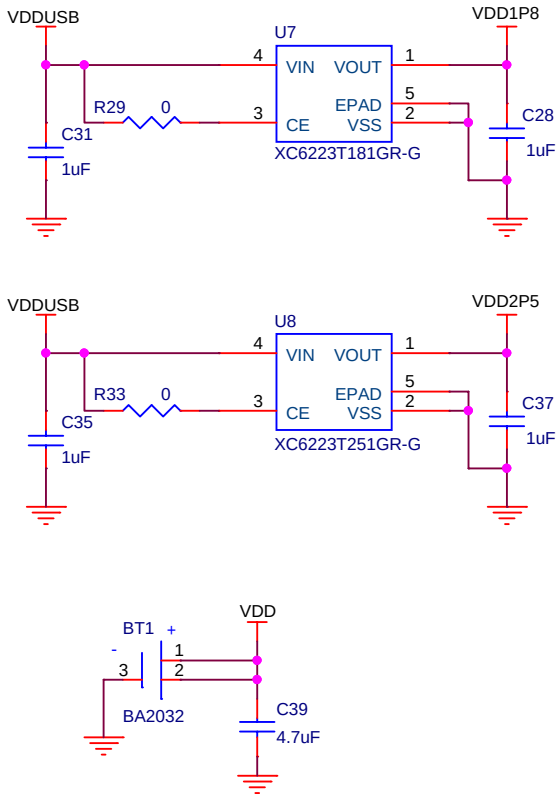

CR2032 Coin Cell Holder

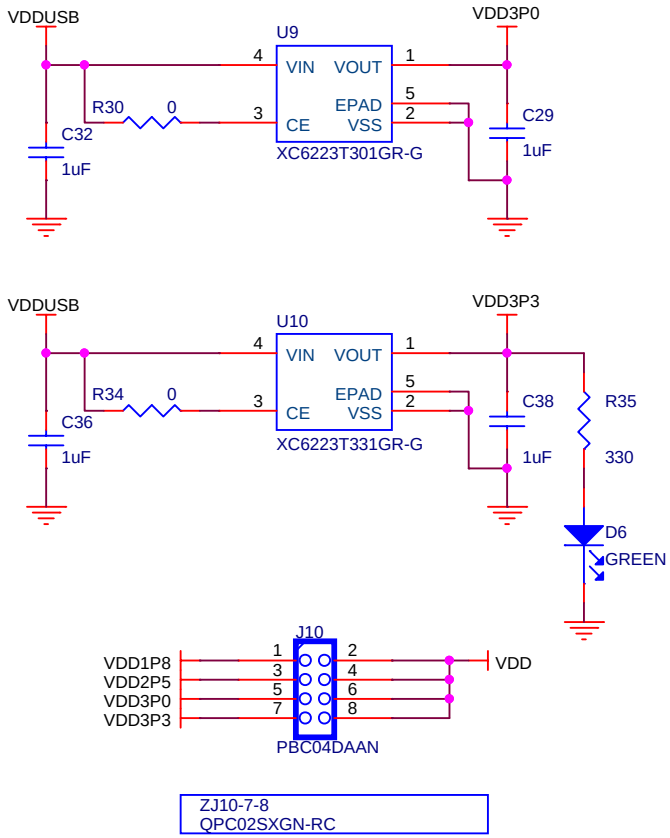

CBL1
750-90043-01

USB CABLE

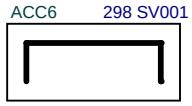

USB CONNECTOR BRACKET

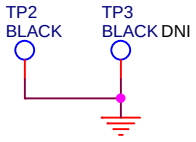

GND TEST POINTS

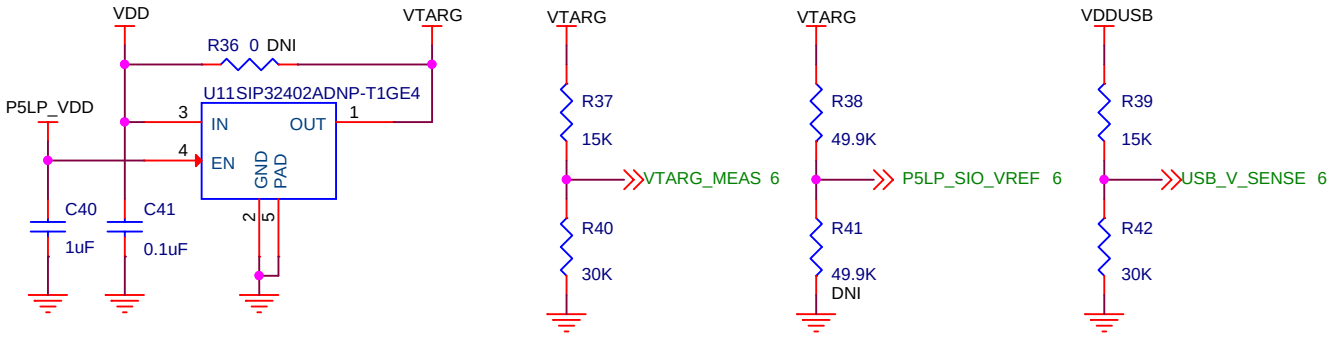

VOLTAGE MONITORING

Legal Disclaimer :
The information given in this document shall in no event be regarded as a guarantee of conditions or characteristics. With respect to any examples or hints given herein, any typical values stated herein and/or any information regarding the application of the device, Infineon Technologies hereby disclaims any and all warranties and liabilities of any kind, including without limitation, warranties of non-infringement of intellectual property rights of any third party.

SCH Title : CYW9BTMDM2BASE1

Page Title: Power

Size	Document Number	Drawn By	Approved By	Rev
A4	630-90805-01	Eric Yang	Seon Lee	1.1

Date: Friday, August 11, 2023 Sheet 7 of 8

REVISION HISTORY

REV	DESCRIPTION OF CHANGE	Orig. of Change	DATE
1.0	Initial Release	Eric Yang	04/23/2023
1.0	ZJ11: to ZJ11-2-3; R8,TP3: DNI; J4,J5: remove DNI.	Eric Yang	08/11/2023

Legal Disclaimer :
The information given in this document shall in no event be regarded as a guarantee of conditions or characteristics. With respect to any examples or hints given herein, any typical values stated herein and/or any information regarding the application of the device, Infineon Technologies hereby disclaims any and all warranties and liabilities of any kind, including without limitation, warranties of non-infringement of intellectual property rights of any third party.

SCH Title : CYW9BTMDM2BASE1

Page Title: Revision History

Size	Document Number	Drawn By	Approved By	Rev
A4	630-90805-01	Eric Yang	Seon Lee	1.1

Date: Friday, August 11, 2023